Operating Instructions

Series RS7000 Hose Reels

Low, Medium and High Pressure Model Numbers:

RS7600 OLP	RS7850 OLP	RS7650 OMP	RS7450 OHP
RS7650 OLP	RS7900 OLP	RS7800 OMP	RS7600 OHP
RS7670 OLP	RS7925 OLP	RS7850 OMP	RS7650 OHP
RS7800 OLP	RS7600 OMP	RS7400 OHP	

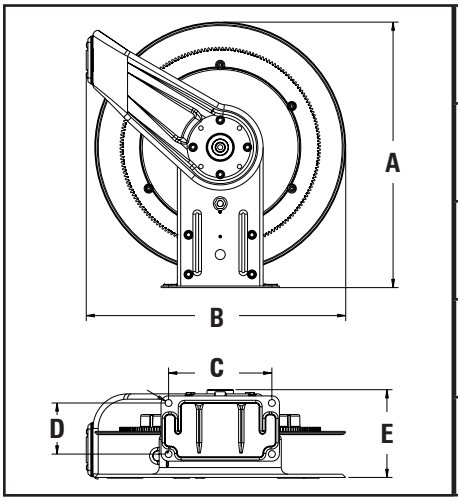

A	20 1/4”
B	19 3/4”
C	7 13/16”
D	3 7/8”
E	7 3/8”

REELSAFE®

IMPORTANT

Read this manual carefully before installing, operating or servicing equipment.

SAFETY

Personal injury and/or equipment damage may result if proper safety precautions are not observed.

- Ensure that reel is properly installed before connecting input and output hoses.
- Bleed fluid/gas pressure from system before servicing reel.
- Before connecting reel to supply line, ensure that pressure does not exceed maximum working pressure rating of reel.
- Remember, even low pressure is very dangerous and can cause personal injury or death.
- Be aware of machinery and personnel in work area.
- If a leak occurs in the hose or reel, remove system pressure immediately.
- A high tension spring assembly is contained within the reel. Exercise extreme caution.
- Pull hose from reel by grasping the hose itself.
- Ensure that reel, hose, and equipment being serviced are properly grounded. Use an ohmmeter to check ground continuity.
- If reel ceases to unwind or rewind, remove system pressure immediately. Do not pull or jerk on hose!
- Treat and respect the hose reel as any other piece of machinery, observing all common safety practices.

ADJUSTMENTS

Warning: Use extreme caution; reel under tension. Avoid releasing latch mechanism. If necessary, adjust spring tension on reel by adding or removing wraps of hose from spool, one wrap at a time, until desired tension is obtained. Add wraps to increase tension. Remove wraps to decrease tension.

SERVICE INSTRUCTIONS

User servicing of the reel is limited to replacing input/output hoses only. Refer all other repairs to an authorized service person or directly to Reelcraft. Failure to do so can result in personal injury and/or equipment damage and may void the warranty. **Warning:** Rewind hose on reel, then bleed pressure from system before performing the following procedures.

1. Replace hoses in accordance with procedures given in “Installation Instructions” section of this manual.

Caution: When replacing drive spring, hold the center of the spring down as the hub is pulled out. If the center is allowed to raise up, the spring may escape from it’s container with enough force to cause injuries.

2. All mating moving parts are to be lubricated with Perma Bond or Loctite anti-seize compound.

When disposing of old or broken spring assemblies, the coils should be welded or wired together to prevent possible injury to scrap handling personnel.

Form# 1311-1119 Rev: 2/2026

Reelcraft Industries, Inc
2842 E Business Hwy 30, Columbia City, IN 46725
855-634-9109 • feedback@reelcraft.com • www.reelcraft.com

REELCRAFT®

INSTALLATION INSTRUCTIONS

MOUNTING

Caution: Unless reel was specified differently when ordering, maximum installation height is 16 feet. Do not exceed this distance.

1. Unpack and inspect reel for damage. Turn by hand to check for smooth operation. Check for completeness.
2. Configure reel for top, side or bottom-wind hose dispensing by removing nuts (1) securing guide arm bracket (2). Position guide arm bracket to desired location, and replace nuts. **Caution:** When changing guide arm positions, the U-bolt must be placed in the proper location as instructed in figure A below. The reel can "latch out" during use if this instruction is not adhered to.
3. Position reel on floor, wall, or ceiling. Secure into place using four (customer supplied) bolts (3).

INSTALLING THE INPUT HOSE

Warning: Ensure that supply line pressure does not exceed maximum working pressure rating of reel. Apply pipe thread sealant to all threads. **Caution:** Use flexible hose connection at input. Do not use rigid plumbing.

1. Connect supply line hose (4) to main shaft input (5) as indicated in illustration.

INSTALLING THE OUTPUT HOSE (No Hose Model)

Warning: Use extreme caution; reel under tension. Avoid releasing latch mechanism. Apply pipe thread sealant to all threads.

1. Manually turn sheave (10) until spring is tight, back off 3 turns, then latch.
2. Route output hose (11) through guide arm bracket (2), U-bolts (12), then through cutout (13) in spool as indicated in illustration.
3. Connect output hose (11) to swivel (14) as indicated in illustration.
4. Tighten U-bolts (12).
5. Charge inlet and outlet hoses. Momentarily open control valve on working end to purge hoses of gases. When fluid appears at control valve, close valve. With hoses fully charged, release latch and wind output hose onto reel.
6. Install REELSAFE® hose identification sticker onto working end of hose in a highly visible location. (Figure B)

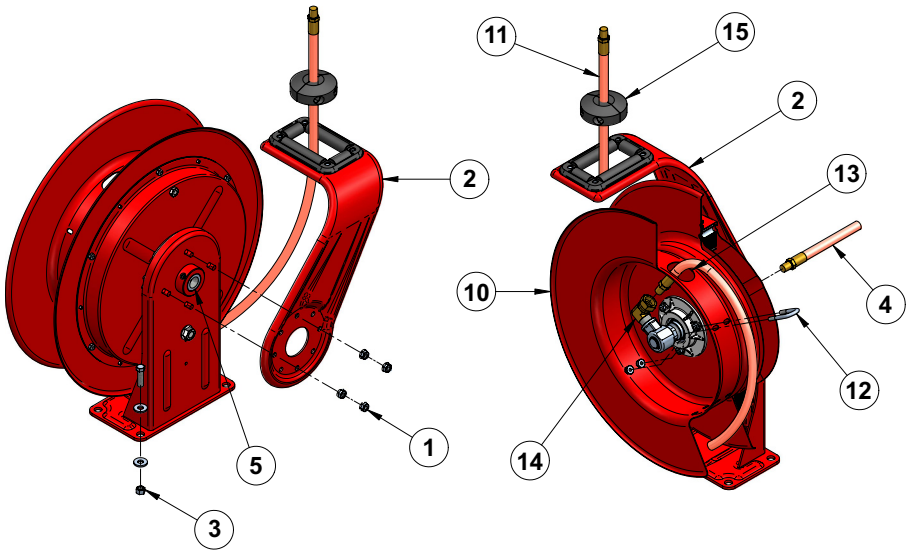

Figure A

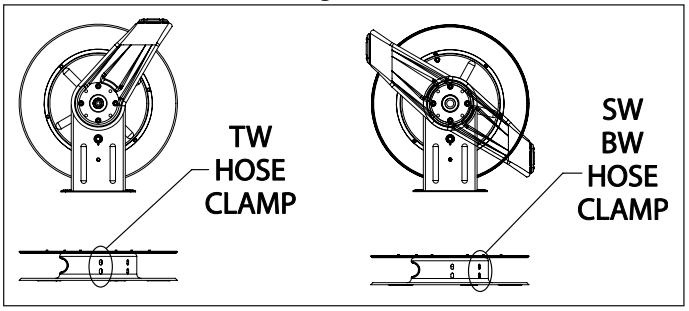

Figure B

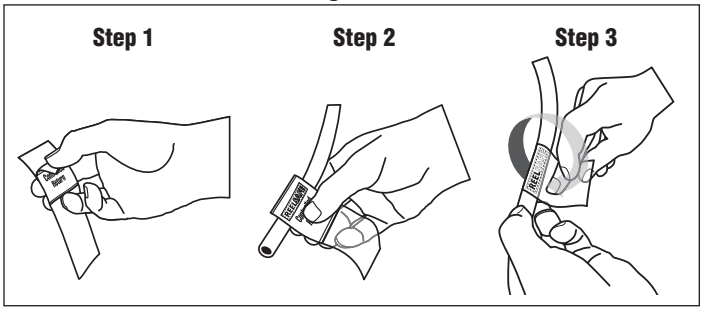

SERVICE TO CLUTCH MECHANISM

1. To access the clutch, remove set screw (13) indicated in below figure.
2. Remove spool assembly from reel base (2).
3. Remove shaft (24) and pinion gear (25) (Note: floats freely and removes without tools).
4. Remove clutch housing (22) by removing 4 bolts (19) to access clutch.
5. Inspect the clutch mechanism for excess wear or damage. If required, remove and replace (no special tools required)
6. Before replacing the clutch inspect bearing (20) replace if there is excess wear.
7. Replace clutch assembly (21) in housing (22). Ensure exposed shoes are facing the base side.
8. Reinstall housing (22) with bolts (19) and nuts (23).
9. Align key way in clutch assembly (20) with key way in shaft (24) and install shaft through bearing (20) in base. Orient shaft so longer key way faces base side.
10. Inspect gear (25). If in good condition, reinstall gear onto shaft (24).
11. Reinstall spool assembly and test reel for clutch functionality.

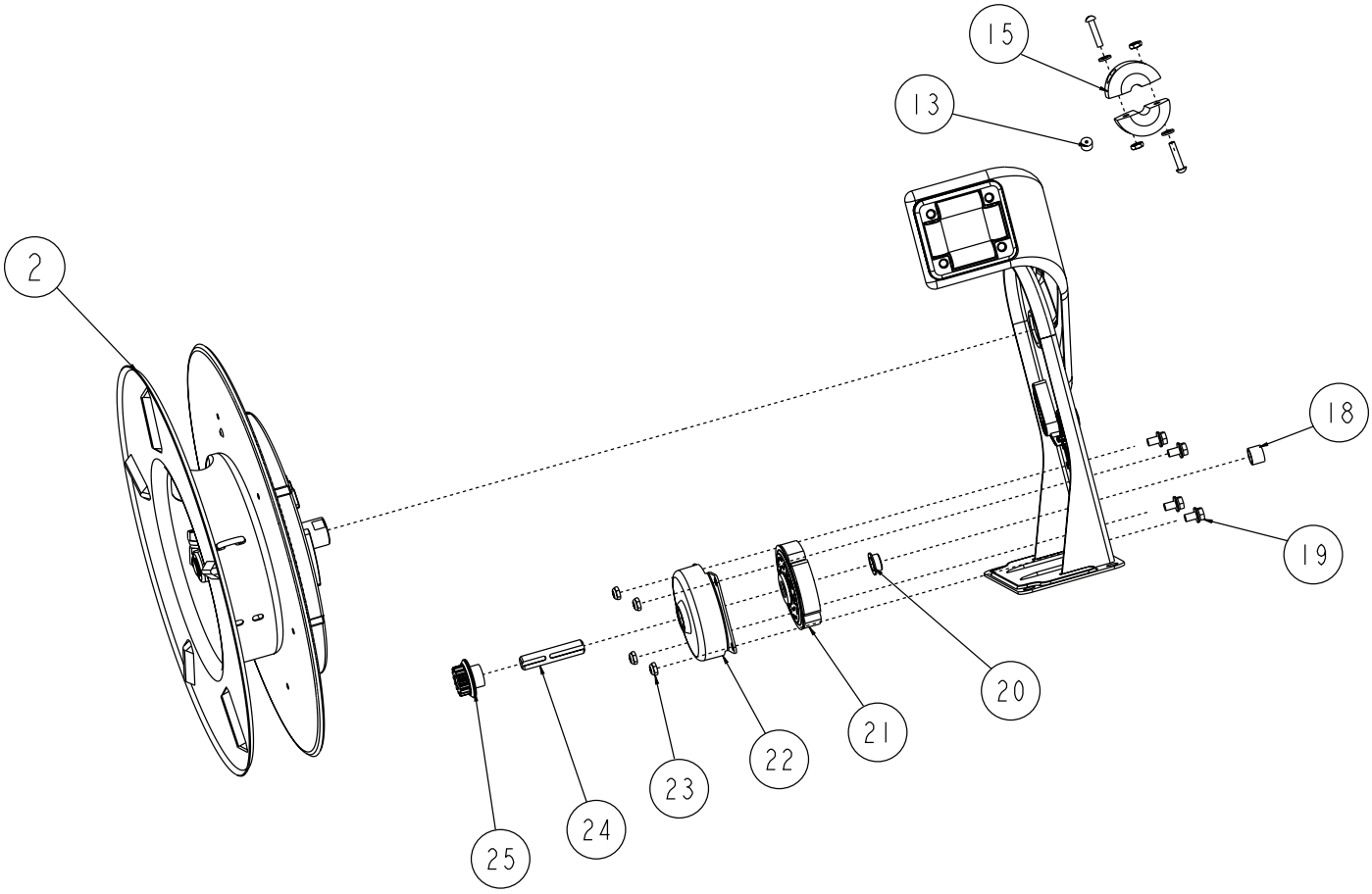

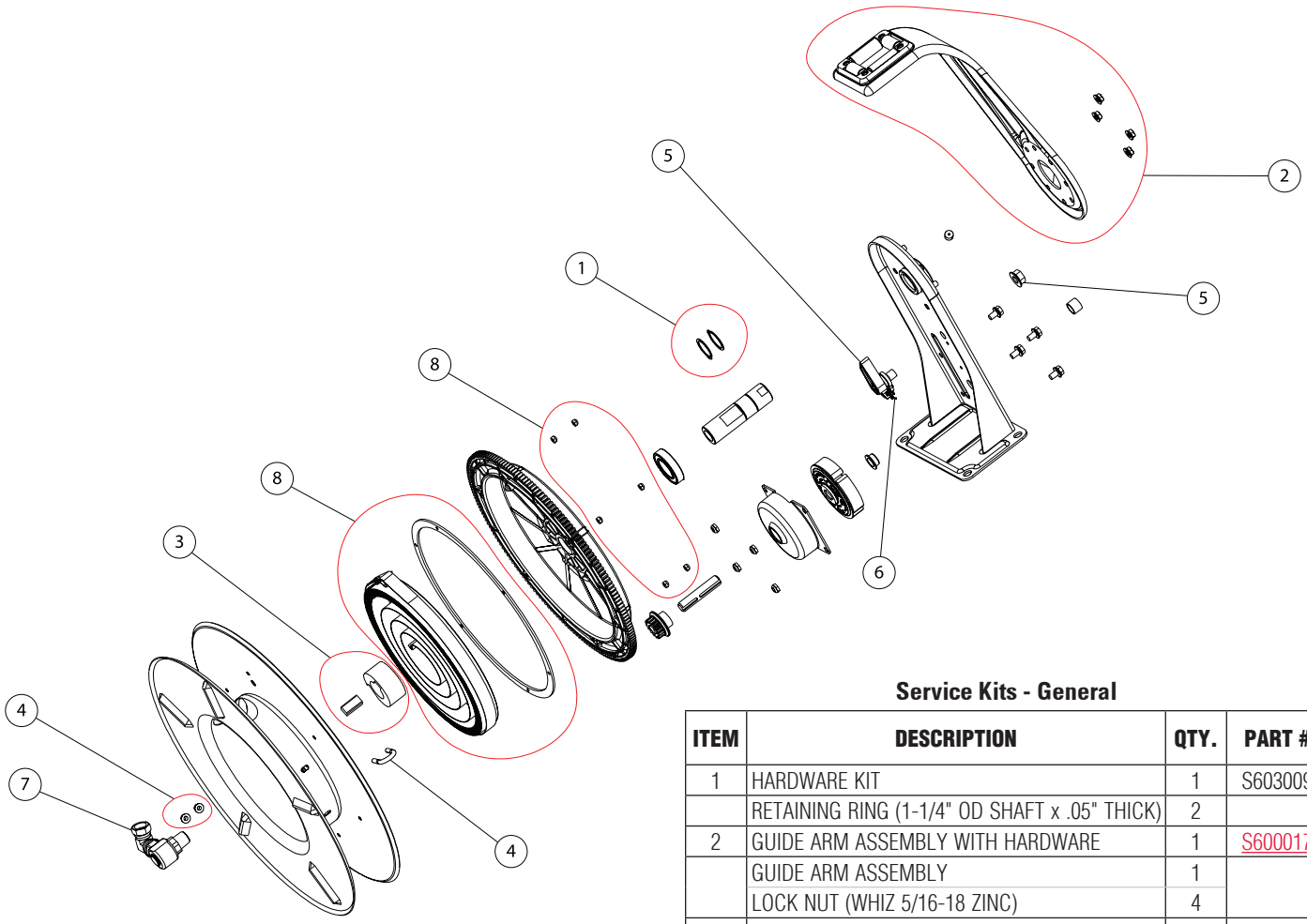

Service Kits - General

ITEM	DESCRIPTION	QTY.	PART #
1	HARDWARE KIT	1	S603009
	RETAINING RING (1-1/4" OD SHAFT x .05" THICK)	2	
2	GUIDE ARM ASSEMBLY WITH HARDWARE	1	S600017
	GUIDE ARM ASSEMBLY	1	
	LOCK NUT (WHIZ 5/16-18 ZINC)	4	
3	SPRING ARBOR ASSEMBLY	1	S600621
4	U-BOLT WITH HARDWARE	1	S3-117440
	"U" BOLT (HOSE CLAMP ZINC 1/2 HOSE)	1	
	LOCK NUT 1/4-20 HEX FLANGE W/NYLON INSERT	2	
5	LATCH PAWL ASSEMBLY WITH HARDWARE	1	S602694
6	LATCH SPRING ONLY	1	S261616

Service Kits - Model Specific

ITEM	DESCRIPTION	QTY.	RS7400 OHP	RS7450 OHP	RS7600 OHP	RS7600 OLP	RS7600 OMP	RS7650 OHP	RS7650 OLP
7	SWIVEL ASSEMBLY	1	S602110-1	S602110-1	S602110-1	S600923-1	S600300-1	S602110-1	S600923-1
8	DRIVE SPRING ASSEMBLY	1	S260053	S260053	S260053	S260028-1	S260053	S260053	S260028-1
	DRIVE SPRING KIT	1							
	SPRING CASE GASKET	1							
	10-32 NYLOC NUT	6							
---	HOSE ASSEMBLY	1	None	S9-260044	None	None	None	S5-260044	S601017-50
---	BUMPER STOP ASSEMBLY	1	None	S1-HR1004-3	None	None	None	S602762	S1-HR1004-3

ITEM	DESCRIPTION	QTY.	RS7650 OMP	RS7670 OLP	RS7800 OLP	RS7800 OMP	RS7850 OLP	RS7850 OMP	RS7900 OLP	RS7925 OLP
7	SWIVEL ASSEMBLY	1	S600300-1	S600923-1	S600923-1	S600300-1	S600923-1	S600300-1	S600242-1	S600242-1
8	DRIVE SPRING ASSEMBLY	1	S260028-1	S260028	S260037	S260053	S260037	S260053	S600023	S600023
	DRIVE SPRING KIT	1								
	SPRING CASE GASKET	1								
	10-32 NYLOC NUT	6								
---	HOSE ASSEMBLY	1	S5-260043	S601017-70	None	None	S601021-50	S8-260043	None	S601026-25
---	BUMPER STOP ASSEMBLY	1	S1-HR1004-3	S1-HR1004-3	None	None	S2-HR1004-3	S2-HR1004-3	None	S2-HR1004-3